Copyright © 2003, 2009, 2022, ASSA ABLOY Accessories and Door Controls Group, Inc. All rights reserved.
Reproduction in whole or in part without the express written permission of ASSA ABLOY Accessories and Door Controls Group, Inc. is prohibited.

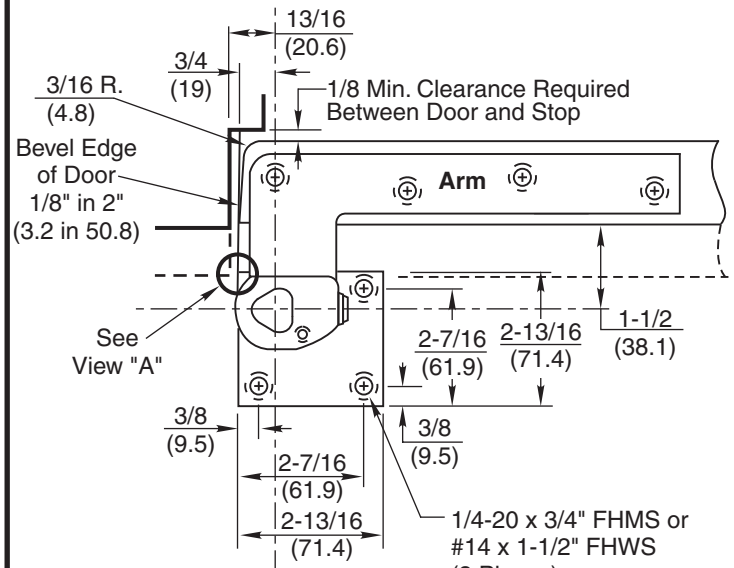

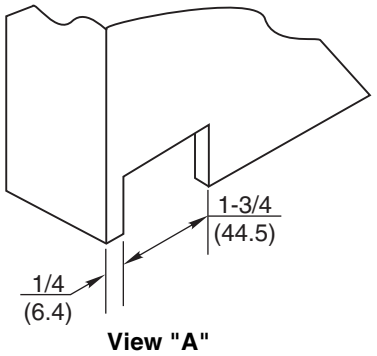

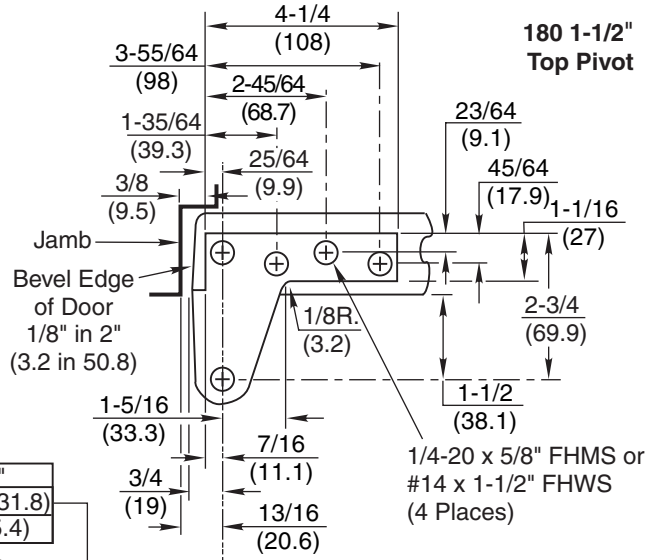

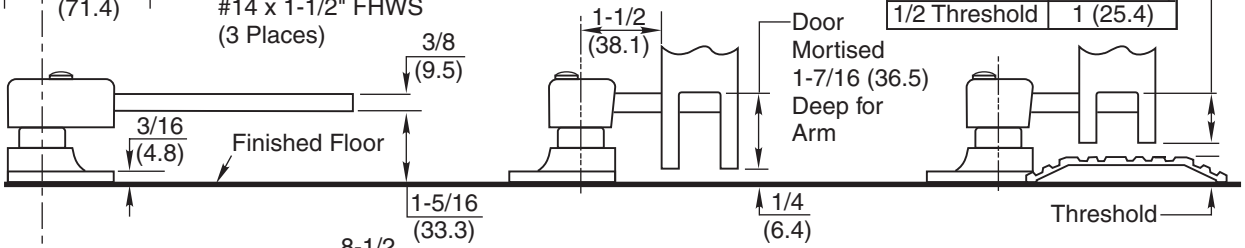

Door Mortised "A" Deep for Arm	"A"
1/4 Threshold	1-1/4 (31.8)
1/2 Threshold	1 (25.4)

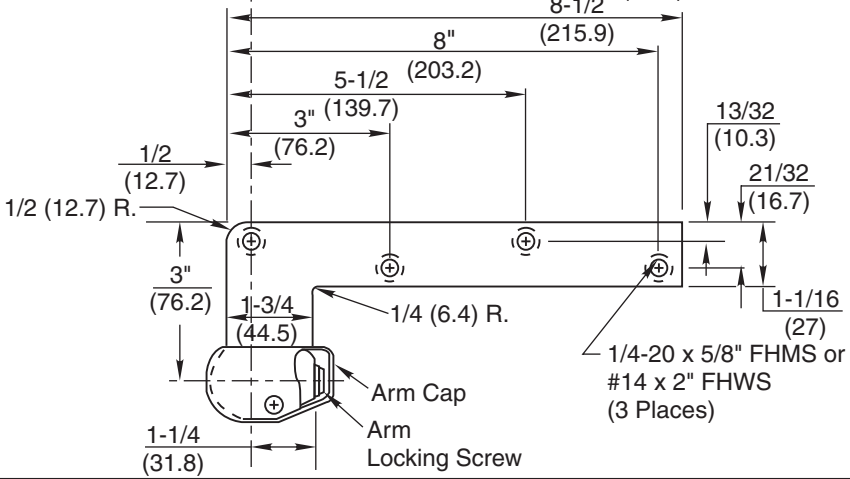

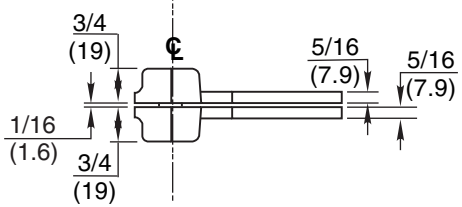

Notes:
1. Do not scale drawing.
2. Right Hand Shown
3. Suitable reinforcing by others.
4. Maximum degree of opening 180°, trim permitting.
5. Dimensions given in inches (mm).

147 Pivot Set
1-1/2″ Offset

NORTON RIXSON
ASSA ABLOY

TEMPLATE NUMBER	REV	DATE
PS30310	3	01/22

Approved 2023-12-15